Mini Train

CEC VERSION

Be Sure to Read this Manual Before Use

Operation Manual

For Parts and Service, call **Amusements Worldwide**

www.amusementsworldwide.com

Tel: 972-778-8200

SERIAL NUMBER

DATE OF INSTALLATION

CONTENT

Important Safety Instructions 2

1. SPECIFICATIONS.....4
2. PACKAGE CONTENTS.....5
3. SET UP & INSTALLATION.....6
   3.1 Play Zone.....6
   3.2 Level Adjustment.....7
   3.3 Transporting the Game.....8
   3.4 Connecting Power.....9
4. HOW TO PLAY.....10
   4.1 Main Menu Intruduction.....10
   4.2 Game Introduction.....11
5. GAME OPERATION.....11
   5.1 Opreation.....11
   5.2 Setting Menu.....12
6. MAINTENANCE AND INSPECTION.....14
   6.1 Safety Check.....14
   6.2 Handling Precautions.....14
7. OVERALL CONSTRUCTION.....15

Non-technical personnel who do not have technical knowledge and Expertise should refrain from performing such work that this manual require or perform tasks which are not explained in this manual. Failing to comply can cause severe accidents such as electric shock or other serious injuries. All repairs must be performed to original manufacturer specifications.

WARNING: To reduce the risk of fire, electric shock or personal injury, unplug or disconnect the machine from the power supply before servicing.

Thank you for purchasing **Mini Train**. We hope you enjoy the product.

This manual contains valuable information about how to operate and maintain your game machine properly and safely. It is intended for the owner and/or personnel in charge of product operation. Carefully read and understand the instructions.

If you need any help during installation and setup please utilize this manual and troubleshooting guide. If the product fails to function properly, *non-technical personnel should under no circumstance attempt to service the machine*. Contact your distributor or manufacturer for help.

Before use, please read **IMPORTANT SAFETY INSTRUCTIONS**.

IMPORTANT SAFETY INSTRUCTIONS

To ensure the safe usage of this product, carefully read and understand these instructions before operating your game. Save these instructions for future reference.

Use this product only as described in this manual. Other uses not recommended may cause fire, electric shock or personal injury. Unplug the game from the outlet when not in use, when moving from one location to another, and before cleaning/servicing.

Explanations which require special attention are indicated by signs of warning. Depending on the potential hazardous degree, the terms: **NOTE**, **NOTICE**, and **WARNING** are used.

NOTE: A NOTE indicates useful hints or information about product usage.
NOTICE: A NOTICE indicates potential damage to product and how to avoid the problem.
WARNING: A WARNING indicates a potential for product damage or serious personal Injury.

It is important to understand the meaning of the following <u>HAZARD SIGNS</u> before continuing:

High Voltage and Shock Hazard:

High voltage can cause electric shock.
Turn off/unplug power before servicing.

High Temperature Hazard:

This part may cause scalding.
Do not touch. Surface may be hot.

No Touching Hazard:

This part may be hot or can cause electric shock.
Do not touch.

Use the following safety guidelines to help ensure your own personal safety and to help protect your equipment and surrounding environment from potential damage.

⚠ This product is an indoor game machine. Do not install outdoors.

Avoid installing in the following places to prevent fire, electric shock, injury and/or machine malfunctioning:

- Places subject to rain/moisture, or places subject to high humidity.
- Places subject to direct sunlight, or places subject to extremely hot or cold temperatures to ensure that it is used within the specified operating range.
- Places where inflammable gas may be present or in the vicinity of highly inflammable/volatile chemicals or items that can easily catch fire
- On unstable or sloped surfaces. The machine may topple or cause unforeseen accidents.
- Vicinity of fire exits, fire extinguishers etc that may block/prevent safety measures

IMPORTANT NOTE:

ALL REPAIRS MUST BE DONE TO ORIGINAL MANUFACTURER SPECIFICATIONS. FAILURE TO DO SO VOID ALL WARRANTIES AND OPERATOR ASSUMES ALL RISKS.

Note: The contents of this manual may be updated without notice.

1. SPECIFICATIONS

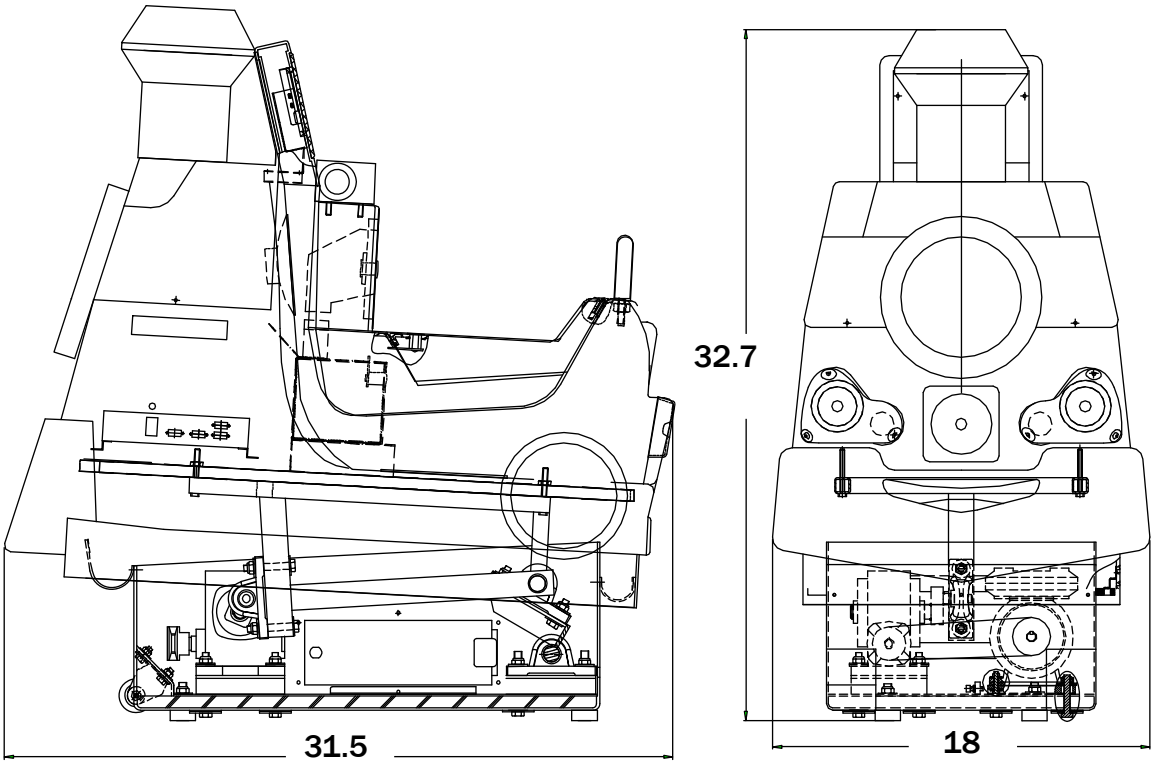

Rated power supply：	AC110V 50/60Hz
Min. Power consumption：	25W
Max. Power consumption：	350W
Dimensions：	W18×D31.5×H32.7(inches)
Weight：	About 220.46kgs

⚠ **NOTICE**: After turning off the game, please wait at least 1 minute before restarting again.

Note: Game parameters are subject to change without notice.

2. PACKAGE CONTENTS

Open the package and make sure all the items are included:

- **1 x Body Assembly**
- **Following accessories**

No.	Part No.	Code No.	Name	Spec.	Qty.	Illustration
1	M117-401-000	21901000014	Fuse	T10A/250 φ6*30mm	1	
2	M117-434-000	21901000001	Fuse	T6A/250 φ5*20mm	1	
3	M117-701-000	41451001001	Manual	English	1	
4	M117-412-000	25300000104	Key	C582	4	
5	M117-403-000	22003000018	Socket bulb	12V	1	
6	M117-435-000	25100080004	Funnel	140mm	1	
7	M117-436-000	25106010016	Rubber pipe	19*24mm	0.2m	
8	M117-602-000	25106030005	Silicone tube-S	Inner dia2MM	0.9M	
9	M117-603-000	25106030006	Silicone tube-L	Inner dia6MM	0.8m	

If any items are found to be missing, please contact your sales representative for help immediately.

Warranty: Universal Space provides 90 days warranty for all electrical and mechanical components, when used under normal operating conditions. Any modification or abuse of these items immediately voids the warranty. Graphic and consumable items are exempt from any warranty.

NOTE: Part models are subject to change without notice.

3. SET UP & INSTALLATION

⚠ This product is an indoor game machine. Do not install outdoors.

- **Refer to IMPORTANT SAFETY INSTRUCTIONS (Pg. 3) for places to avoid**
- **Place the unit on a dry level surface**
- **Ventilation openings in the back of the unit must not be obstructed by objects or by wall.**

3.1 Play Zone

This machine requires space for playing and for maintenance as shown below.
Leave space around the game upon installation:

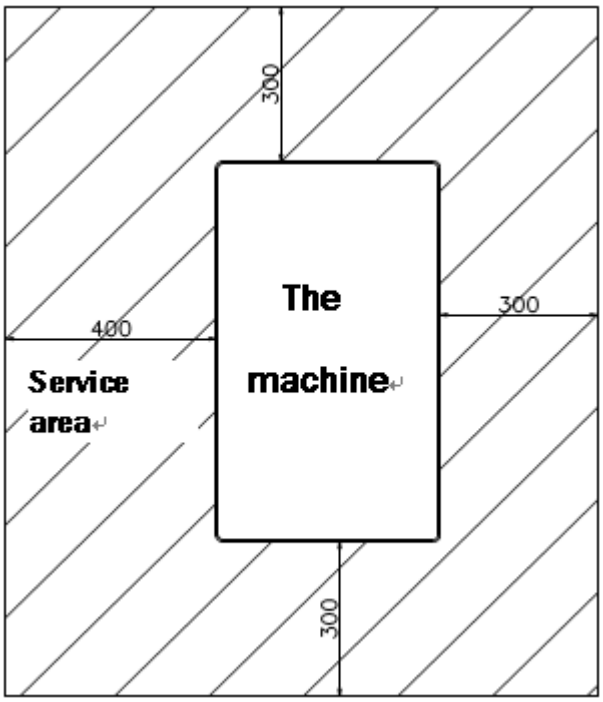

(mm)

3.2 Level Adjustment

Install this machine on a flat surface. Adjust levers to lift casters off the ground to level the game. If the game is installed on an unsuitable floor, it could cause a malfunction.

To fix the game, adjust the Leveler down until it touches the floor, lifting the casters off the ground by 5mm. Repeat the same for all levelers.

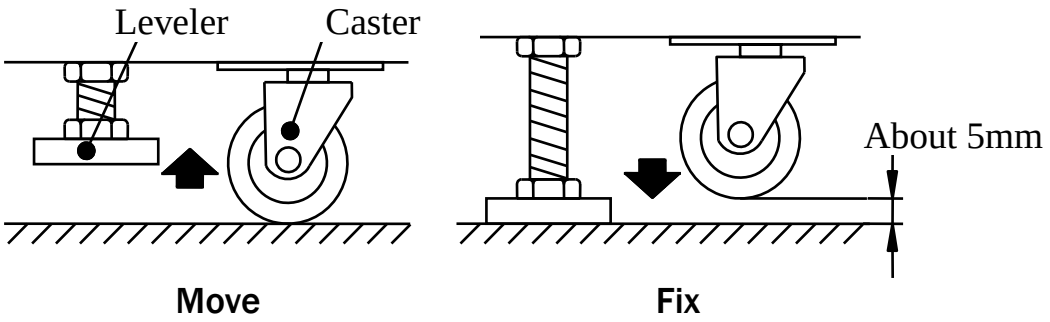

⚠ NOTICE

Make sure the machine is level with the ground and all the adjustable legs should stick to the floor closely.

3.3 Transporting the Game

If you need to move the game, adjust the levelers back to an “up” position so the casters touch the ground.

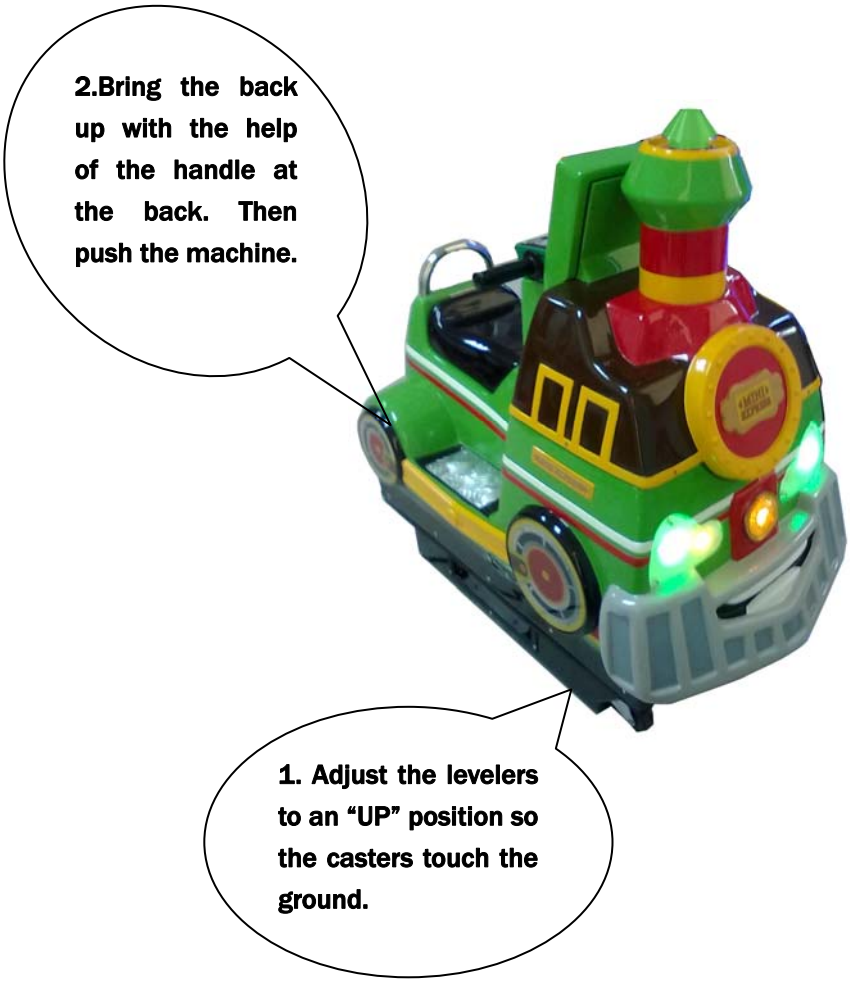

⚠ NOTICE

- Be careful not to damage the machine during transport.
- The machine should be handled with care when bringing it down from a higher level.
- Always unplug the game before moving.
- Keep the machine in upright position during transport.
- For longer distance transport, package the game properly to prevent damages

3.4 Connecting Power

⚠ **WARNING**: Check the voltage rating before you connect the equipment to an electrical outlet to ensure that the required voltage and frequency match the available power source. Please refer the label of the machine.

- Do not plug the equipment power cables into an electrical outlet if the power cable is damaged.
- Avoid putting many loads on one electrical outlet as it could generate heat and fire resulting from overload.
- Connect the grounding conductor to the earth terminal (GND):

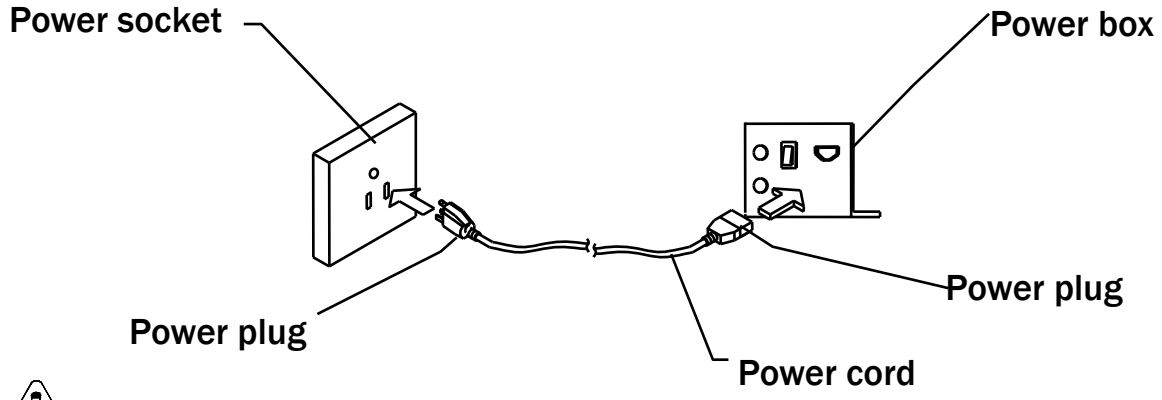

⚠ **WARNING**

Ensure no heavy objects rest on the power cord. Check to make sure the game cabinet does not sit on the power cord as this could damage the cord and become hazardous.

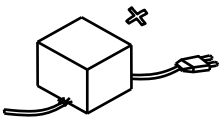

To disconnect the game, grip the plug and pull it from the wall outlet. Never pull by the cord.

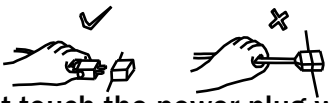

To prevent electric shock, do not touch the power plug when hand is wet.

Ensure that nothing rests on the power cord and that it is not located where it can be stepped on or tripped over.

4. HOW TO PLAY

4.1 Main Menu

Before the game starts, there's the LOADING screen.

1.Game LOGO

2. DEMO

4.2 Game Introduction

1. Insert coin(s).

2.Turn the handlebar left or right to control the direction, press the button in the middle will hear train siren and smoke comes out from the chimney.

5. GAME OPERATION

5.1 Operation

Press the Reset and Service button (or turn left & turn right of the handlebar) to select the options. Enter one page, if you want to adjust one item, please wait until this item is highlighted.

Then press the button on the control panel.

And then press the Reset and Service button to adjust.
Press Reset button is to decrease and press Service button is to increase.

Press button to exit after finishing adjustment. Press Reset and Service button switch to SAVE (CANCEL).

Press button to save.

5.2 Game Setting Menu

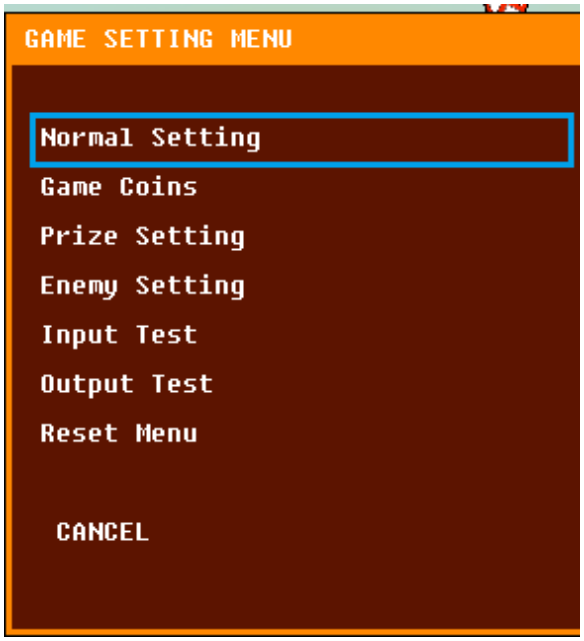

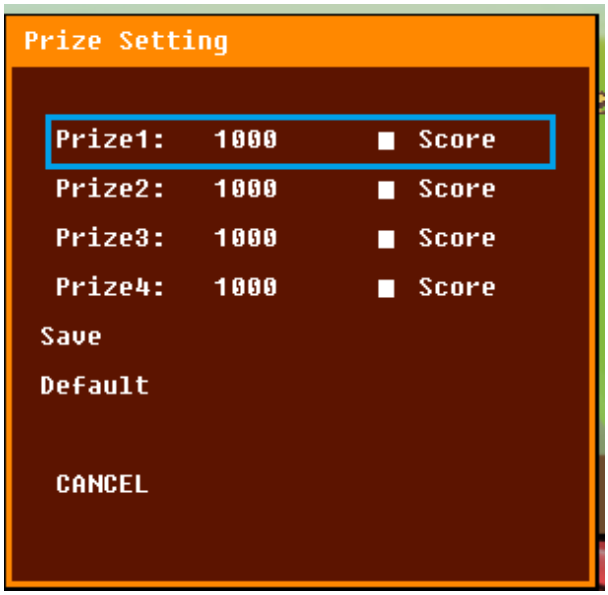

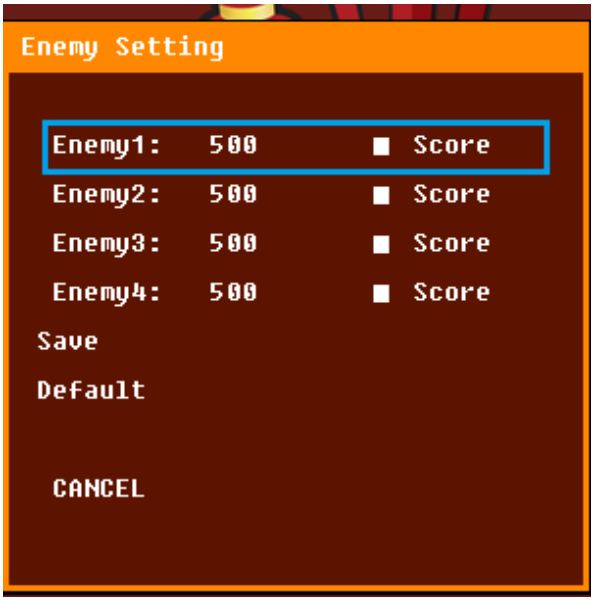

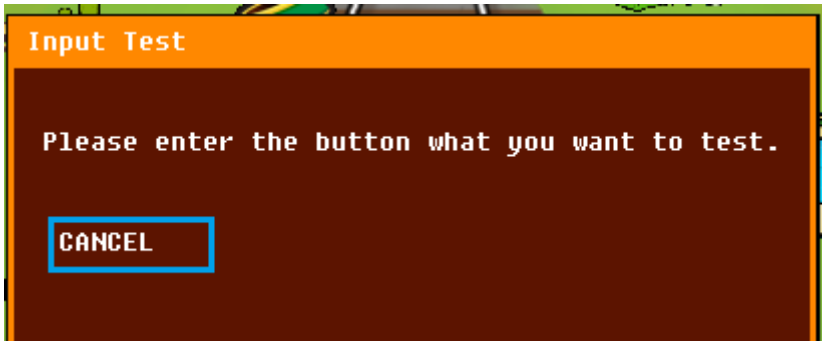
Input Test
Please enter the button what you want to test.
CANCEL

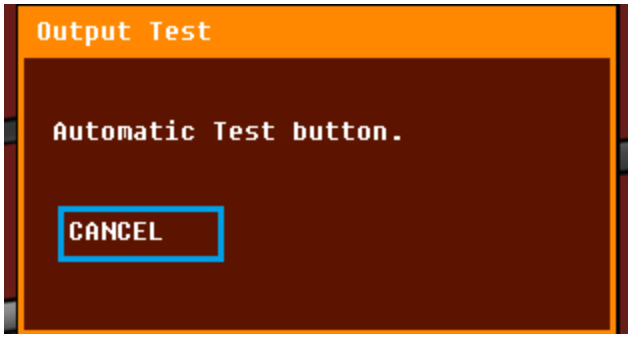
Output Test
Automatic Test button.
CANCEL

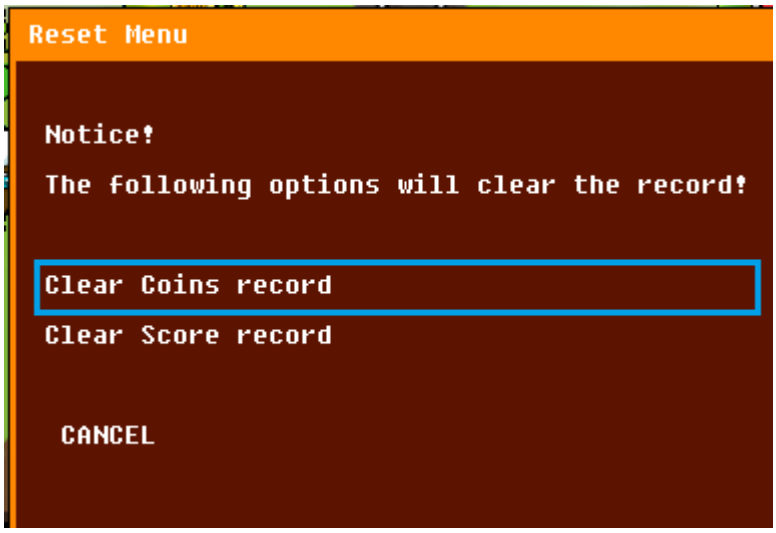
Reset Menu
Notice!
The following options will clear the record!
Clear Coins record
Clear Score record
CANCEL

6. MAINTENANCE AND INSPECTION

6.1 Safety Check

Check the points listed before operating the machine. These checks are necessary for safe machine operation:

1. Try to run the game before operation each day.
2. Conduct monthly routine checks of game components ensure good working condition
3. Check the machine regularly for dust and clean when necessary.

Note: Parts and components require preventative maintenance to be kept running smoothly.

About Adding Oil to the Gearbox

Please check and make sure there is **200ml~250ml** oil in the gearbox before operating the machine every time.

6.2 Handling Precautions

When installing or inspecting the machine, be very careful of the following points and pay attention to ensure that the player can enjoy the game safely.

Non-compliance with the following points or inappropriate handling running counter to the cautionary matters herein stated can cause personal injury or damage to the machine

WARNING

- Before servicing the machine, be sure to turn power off. Servicing without turning the power off can cause electric shock or short circuit.
- To avoid electric shock or short circuit, do not plug then unplug the power quickly
- Do not expose power cords and earth wires, these are susceptible to damage.
- Damaged cords and wires can cause electric shock or short circuit and should be replaced immediately.
- When or after installing the product, avoid pulling the power cord to prevent unnecessary wear and tear. Use the power button to disconnect power.
- In case the power cord is damaged, ask for replacement through where the product was purchased from or replace locally. Continued usage of damaged cord can cause fire, electric shock or leakage.
- Perform grounding appropriately. Inappropriate grounding can cause electric shock.
- Use fuses that meet specified rating. Fuses exceeding can cause an electric shock.
- Should a problem occur, turn off the power immediately and stop operating the machine. Unplug the power cord of the service outlet. Operating the machine without correcting the problem may cause a fire or injuries.
- Insert the power plug securely into the outlet. Poor contact may cause overheating, resulting in fire or burns.
- To ensure the warning labels attached on the machine are visible and legible, install the machine in a well-lit location, and keep the labels clean at all times. Make sure

the labels are not hidden behind other game machines.

7. OVERALL CONSTRUCTION

Front view:

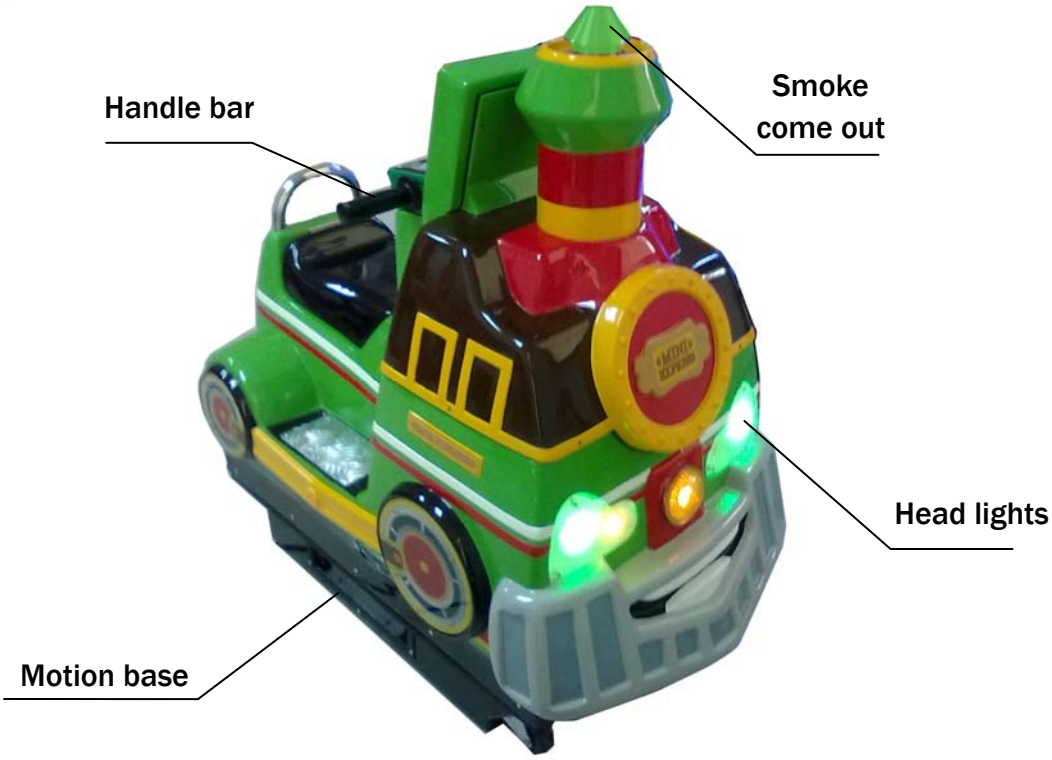

Back View:

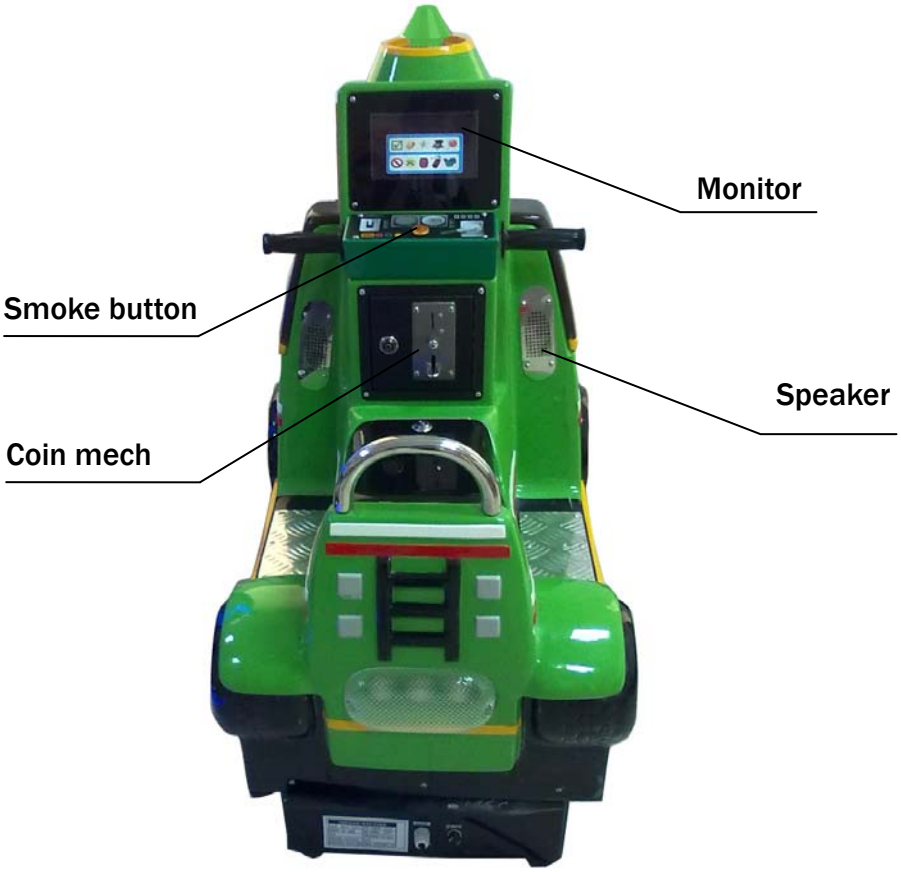

7.1 Main Assembly

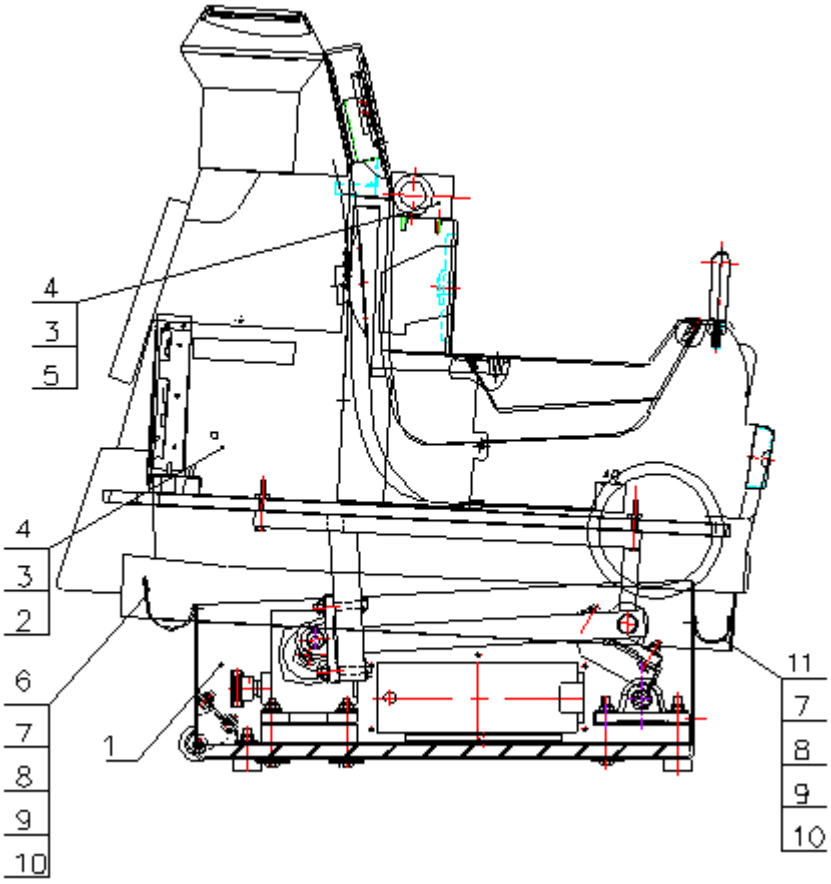

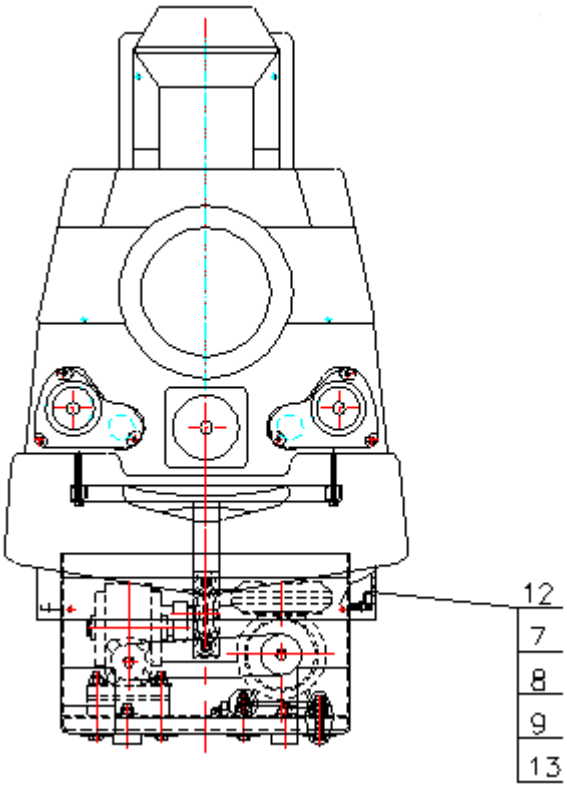

No.	Part No.	Code No	Name	SPEC.	Qty
1	M117-003-000	MNXHC-02-00	Base Assy.		1
2	M117-002-000	MNXHC-01-00	Body assembly		1
3	M117-301-000	20113000051	C flat washer	8×1.6h	8
4	M117-183-000	20102000023	Non-metallic hexagon lock nut	M8	8
5	M117-001-000	MNXHC-03-00	Steering wheel Assy.		1
6	M117-101-000	20651001001	Front skirt	Black	1
7	M117-302-000	20113000013	A&C type big washer	4×1h GB/T96-1985	40
8	M117-309-000	20111000008	Open-type round head rivet	4×20	24
9	M117-184-000	20101100161	Hexagon flat round head screws	M4×25	16
10	M117-102-000	QST-00-05	Front& back skirt fixed plate	δ1.5 Metal	2
11	M117-103-000	QST-00-02	Back skirt	Black	1
12	M117-104-000	QST-00-03	Side sponge	Black	2
13	M117-105-000	QST-00-04	Side sponge fixed plate	Metal	2
14	M117-004-000	MNXHC-05-00	smoke system assy.		1

7.2 Body Assembly

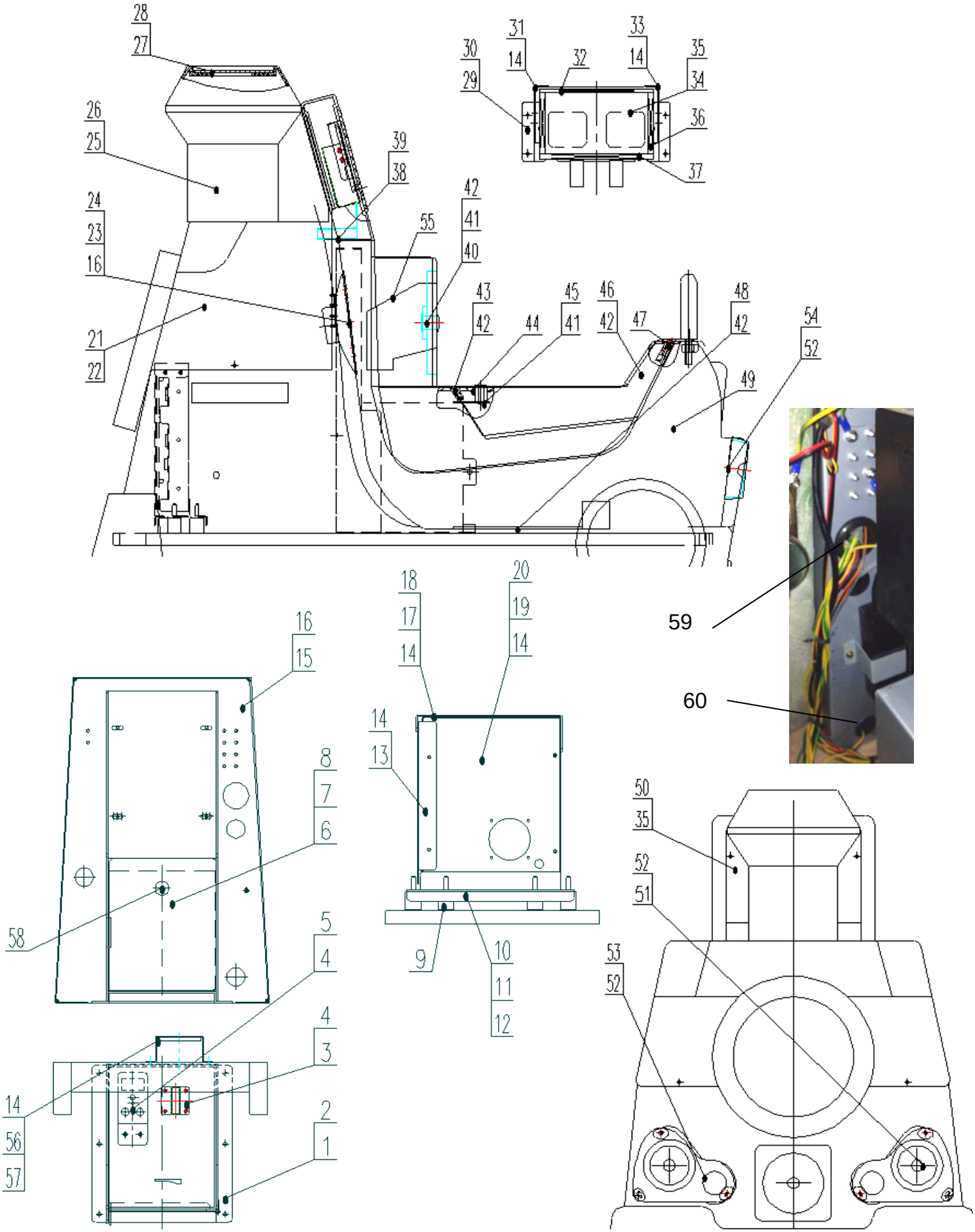

No.	Part No.	Code No.	Name	SPEC.	Qty
1	M117-185-000	MNXHC-01-08	Coin mech cover	Welding part	1
2	M117-303-000	20103100001	Cross recessed self-tapping screw	ST4.2×15	4
3	M117-186-000	MNXHC-01-09	Coin funnel	δ1.2	1
4	M117-311-000	20101020034	Cross recessed pan head screw suite		8
5	M117-109-000	MNJCC-01-20	Meter plate		1
6	M117-187-000	MNXHC-01-07	Coin box	δ1.5	1
7	M117-188-000	MNXHC-01-21	Coin box damping pad	δ1	1
8	M117-402-000	25300000004	C582 lock	C582	1
9	M117-131-000	TY-JX-013	Shockproof screw B	Color Zinc	4
10	M117-189-000	MNXHC-01-29	PC bracket	δ1.5	1
11	M117-190-000	MNXHC-01-30	PC protected pad	δ1	1
12	M117-314-000	20102000012	Hexagon nut with flange	M6	4
13	M117-191-000	MNXHC-01-33	Connecter baffle	δ1.5	1
14	M117-315-000	20101020040	Cross recessed pan head screw suite	M4×8 color Zinc	10
15	M117-192-000	MNXHC-01-36	Back plate	δ1.5	1
16	M117-316-000	20102020011	Hexagon nut with flange	M4 Color Zinc	16
17	M117-193-000	MNXHC-01-34	Fixed plate	δ1.5	1
18	M117-194-000	MNXHC-01-35	Fixed strip	δ1	1
19	M117-195-000	MNXHC-01-31	PC box plate	δ1	1
20	M117-196-000	MNXHC-01-32	PC box cover plate	δ1	1
21	M117-111-000	MNXHC-01-02	Train cover plate	Fiberglass	1
22	M117-305-000	20101000008	Hexagon flat round head screw	M4×30	11
23	M117-112-000	MNJCC-01-05	Speaker net		2
24	M117-305-000	20101000008	Hexagon flat round head screw	M4×30	8
25	M117-601-000	MNXHC-01-03	Train head chimney	fiberglass	1
26	M117-317-000	20101020037	Cross recessed pan head screw suite	M4×20 Color Zinc	4
27	M117-471-000	MNXHC-YCG-01	Chimney cover		1
28	M117-318-000	20101100066	Hexagon flat round head screw	M4×10	4
29	M117-118-000	MNJCC-01-04	LCD frame		1
30	M117-307-000	20101000017	Cross recessed sunk head screw	M4×12	4
31	M117-116-000	MNJCC-01-26	LCD fixed plate L	Metal	1
32	M117-472-000	MNJCC-01-31	LCD inner upper foam	T=5	1
33	M117-117-000	MNJCC-01-27	LCD fixed plate R		1

No.	Part No.	Code No.	Name	SPEC.	Qty
34	M117-702-000	MNJCC-HM-02	LCD frame decal	240X185	1
35	M117-319-000	20101000006	Hexagon flat round head screw	M4×16	4
36	M117-115-000	MNJCC-01-23	LCD inner short foam		2
37	M117-114-000	MNJCC-01-22	LCD inner long foam		1
38	M117-119-000	MNJCC-01-25	Fan net		1
39	M117-308-000	20101000032	Cross recessed pan head screw suite	M3×20	4
40	M117-120-000	MNJCC-01-19	Coin mech door	Welding part	1
41	M117-402-000	25300000004	C582 lock		2
42	M117-309-000	20111000008	Open-type round head rivet	4×20	25
43	M117-132-000	MNXHC-01-28	Lock baffle	T1	1
44	M117-121-000	MNJCC-01-24	Lock fixed piece		1
45	M117-404-000	QST-01-33	Seat lock(CEC)		1
46	M117-122-000	MNJCC-01-03	Seat fiberglass		1
47	M117-123-000	MNJCC-01-18	Seat hinge	Q235	1
48	M117-128-000	MNJCC-01-10	Foot plate	Aluminum plate	2
49	M117-127-000	MNXHC-01-01	Train fiberglass	δ5	1
50	M117-181-000	MNXHC-01-04	Monitor cover		1
51	M117-126-000	MNJCC-01-13	Lamp R cover	Crystal plate	1
52	M117-310-000	20103000008	Cross recessed self-tapping screw	ST3.5×20	18
53	M117-125-000	MNJCC-01-12	Lamp L cover	Crystal plate	1
54	M117-124-000	MNJCC-01-15	Tail lamp cover	Crystal plate	1
55	M117-140-000	QST-01-31	Lamp panel	t3/ black	1
56	M117-468-000	HLSC-00-09	Power amplifier power board	t1.2	1
57	M117-469-000	HLSC-00-10	Power amplifier power bar	t5	1
58	M117-405-000	QST-01-32	Coin mech lock(CEC)		1
59	M117-474-000	23313000001	Big bushing		1
60	M117-475-000	23313000266	Bushing		3

7.3 Base Assembly

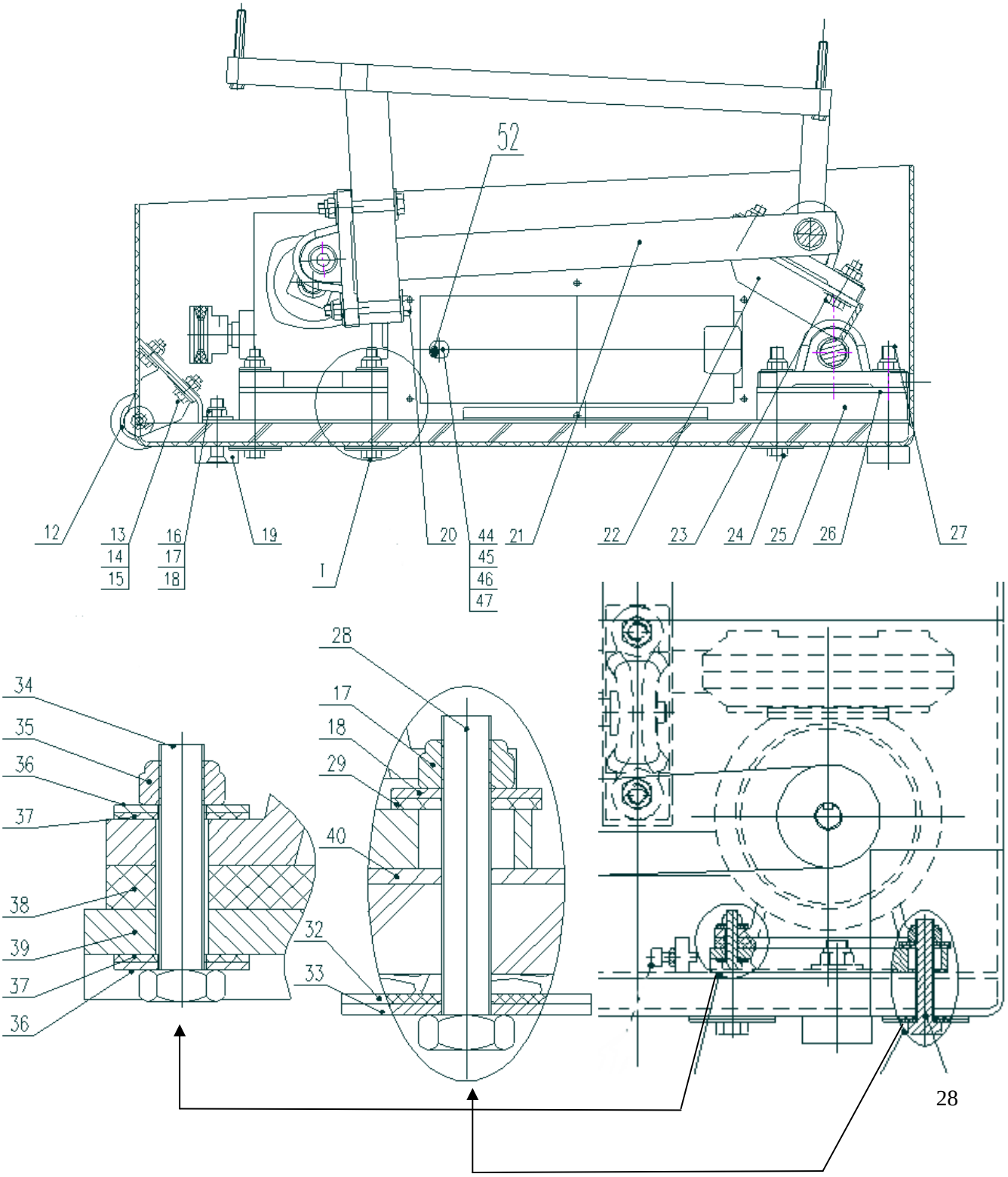

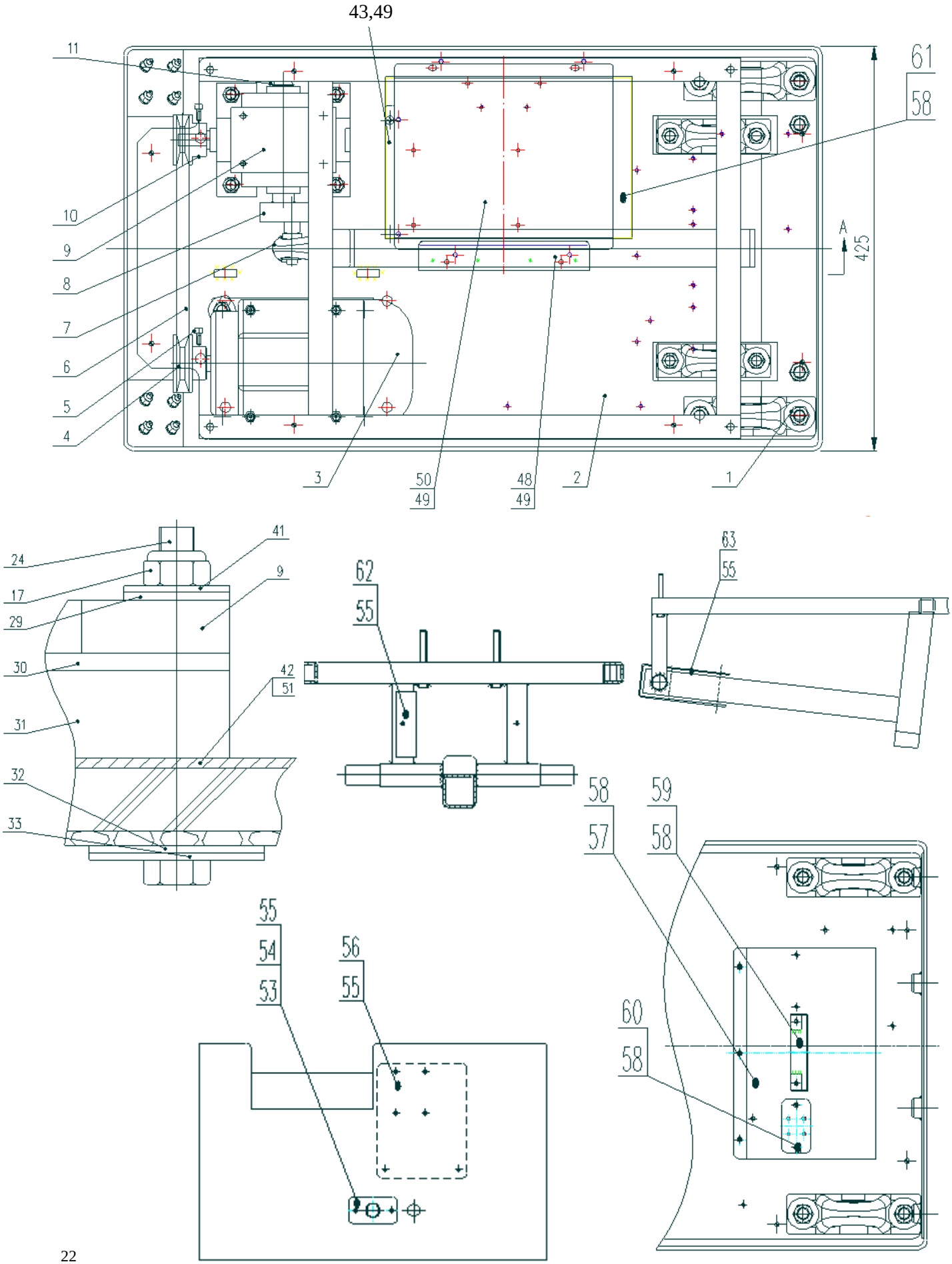
43,49
11
61
58
10
9
8
7
6
5
4
A
425
3
50
49
48
49
2
1
24
17
29
30
31
32
33
41
9
42
51
62
55
63
55
58
57
59
58
55
54
53
56
55
60
58

No.	Part No.	Code No	Name	SPEC.	Qty
1	M117-406-000	20106130030	Insert BD.	UCP205	4
2	M117-197-000	MNXHC-02-01	Base fiberglass		1
3	M117-474-000	23405010007	Motor	(UL)	1
4	M117-153-000	MNJCC-02-08	Drive wheel		1
5	M117-320-000	20101000004	Hexagon flat head tight screw		2
6	M117-457-000	26501000004	Type A triangle belt	A-24	1
7	M117-411-000	20106130029	Insert BD.		1
8	M117-182-000	208.5.11.04A.005	Crankshaft	Welding part	1
9	M117-475-000	23402000020	gear box	WPKA-1：30	1
10	M117-149-000	MNJCC-02-09	Driven wheel		1
11	M117-476-000	20105000033	A type circlip for shaft	do20	1
12	M117-407-000	25501000060	2.5 caster	1-2568-44	2
13	M117-321-000	20104000005	Cross recessed hexagon screw suite		8
14	M117-322-000	20102000023	Non-metallic hexagon lock nut	M8	8
15	M117-301-000	20113000051	C flat washer	8×1.6h	8
16	M117-323-000	20101000064	Hexagon sunk head screw	M10×60	8
17	M117-324-000	20102000001	Non-metallic hexagon lock nut	M10	20
18	M117-313-000	20113000032	C Extra large washer	10×3h	16
19	M117-146-000	MNJCC-02-10	Foot pad		4
20	M117-325-000	20104000022	Hexagon head bolt	M10×70	2
21	M117-198-000	MNXHC-02-03	Bracket 1	Black	1
22	M117-134-000	MNJCC-02-11	Bracket2	Welding part	1
23	M117-326-000	20104000008	Hexagon head bolt	M10×40	4
24	M117-327-000	20104000023	Hexagon head bolt	M10×90	6
25	M117-136-000	MNJCC-02-12	BD. pedestal base plate		2
26	M117-135-000	MNJCC-02-13	BD. pedestal damping rubber		2
27	M117-328-000	20101000123	Cross recessed sunk head screw	M10×105	2
28	M117-329-000	20104000024	Hexagon head bolt	M10×60	4

No.	Part No.	Code No	Name	SPEC.	Qty
29	M117-154-000	MNJCC-02-14	Gasket rubber		8
30	M117-143-000	MNJCC-02-15	Gear box damping rubber		1
31	M117-142-000	MNJCC-02-16	Gear bow base plate		1
32	M117-148-000	MNJCC-02-17	Wide gasket rubber		8
33	M117-144-000	MNJCC-02-18	Wide gasket metal plate	Q235	14
34	M117-330-000	20104000025	Hexagon bolt	M6×30	4
35	M117-331-000	20102000003	Non-metallic hexagon lock	M6	4
36	M117-145-000	20113000012	A&C type big washer	6×1.6h	8
37	M117-147-000	MNJCC-02-19	Motor pad		8
38	M117-152-000	MNJCC-02-20	Motor damping rubber		1
39	M117-151-000	MNJCC-02-06	Motor base plate		1
40	M117-150-000	MNJCC-02-21	Insulated gasket		2
41	M117-312-000	20113000052	C flat washer	10×2h	4
42	M117-199-000	MNXHC-02-22	Bed plate	Black	1
43	M117-141-000	MNJCC-02-23	Locating piece		1
44	M117-419-000	QST-02-25	Lock block plate(CEC)		1
45	M117-138-000	MNJCC-02-02	Service door	Welding part	1
46	M117-332-000	20111000003	Open-type round head rivet	5×15	6
47	M117-402-000	25300000004	C582 lock		1
48	M117-139-000	MNJCC-02-07	Electrical block plate		1
49	M117-333-000	20101000041	Cross recessed pan head screw suite	M5×12	6
50	M117-201-000	MNXHC-02-04	Electrical part mounted plate	δ1.5	1
51	M117-334-000	20111000004	Open-type round head rivet	5×25	8
52	M117-456-000	25102000002	Stainless Steel Handle	Φ10×96×M	1
53	M117-202-000	MNXHC-02-30	Cable plate	δ2	1
54	M117-203-000	MNXHC-02-30B	Cable plate B	δ2	1
55	M117-335-000	20111000016	Open-type flat round head rivet	4×10	10
56	M117-336-000	MNXHC-02-31	Protected pad A	δ2	1
57	M117-204-000	MNXHC-02-27	Filter protected cover	δ1.5	1
58	M117-337-000	20101020040	Cross recessed pan head screw suite	M4×8 color	12
59	M117-205-000	MNXHC-02-29	Clip plate	δ1.2	1
60	M117-206-000	MNXHC-02-26	GND plate	δ1.5	1
61	M117-207-000	MNXHC-02-28	Power protected cover	δ1	1
62	M117-208-000	MNXHC-02-33	Protected pad C	δ2	1
63	M117-20+-000	MNXHC-02-32	Protected pad B	δ2	1

7.4 Console Assembly

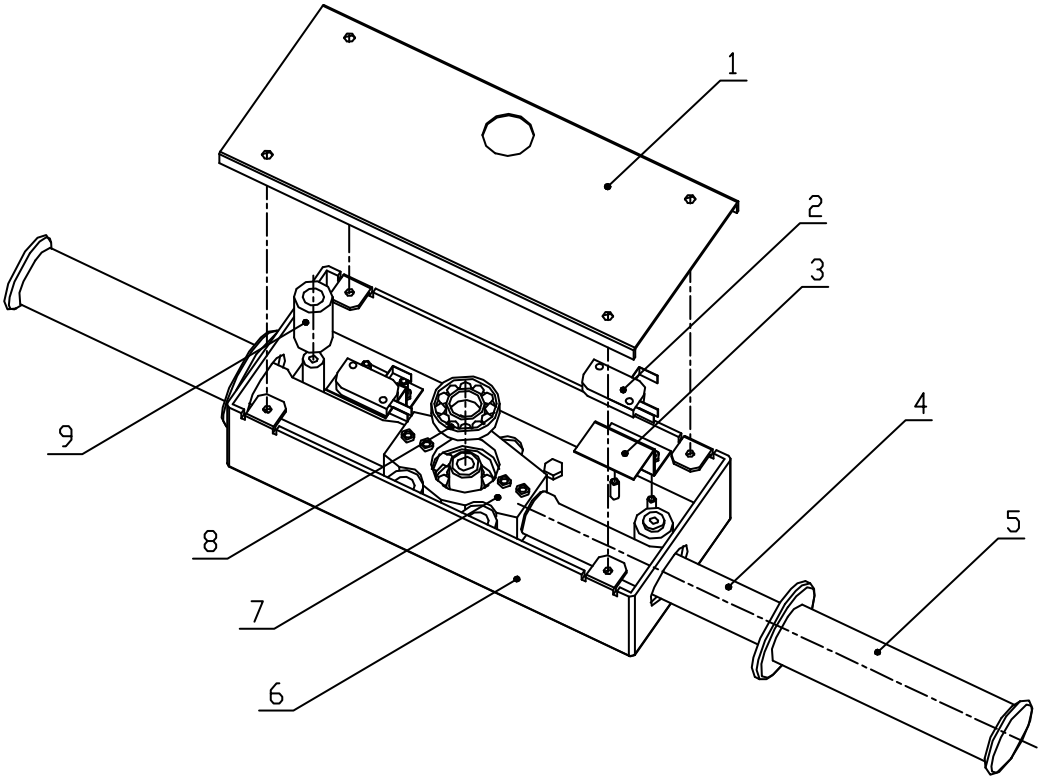

No.	Part No.	Code No.	Name	SPEC.	Qyt
1	M117-156-000	20251104003	Steering wheel cover	t1.5/ green	1
2	M117-473-000	22604000004	Micro switch		2
3	M117-157-000	20250801026	Micro SW holder		2
4	M117-158-000	20250801025	Handle axes		2
5	M117-413-000	25102000035	Handle		2
6	M117-159-000	20251104002	Seat outer frame		1
7	M117-160-000	20250801027	BD. seat		1
8	M117-414-000	20106000082	Deep groove ball BD.	6002ZZ	2
9	M117-161-000	20650801021	Cushion collar		4

7.5 Smoke Assembly

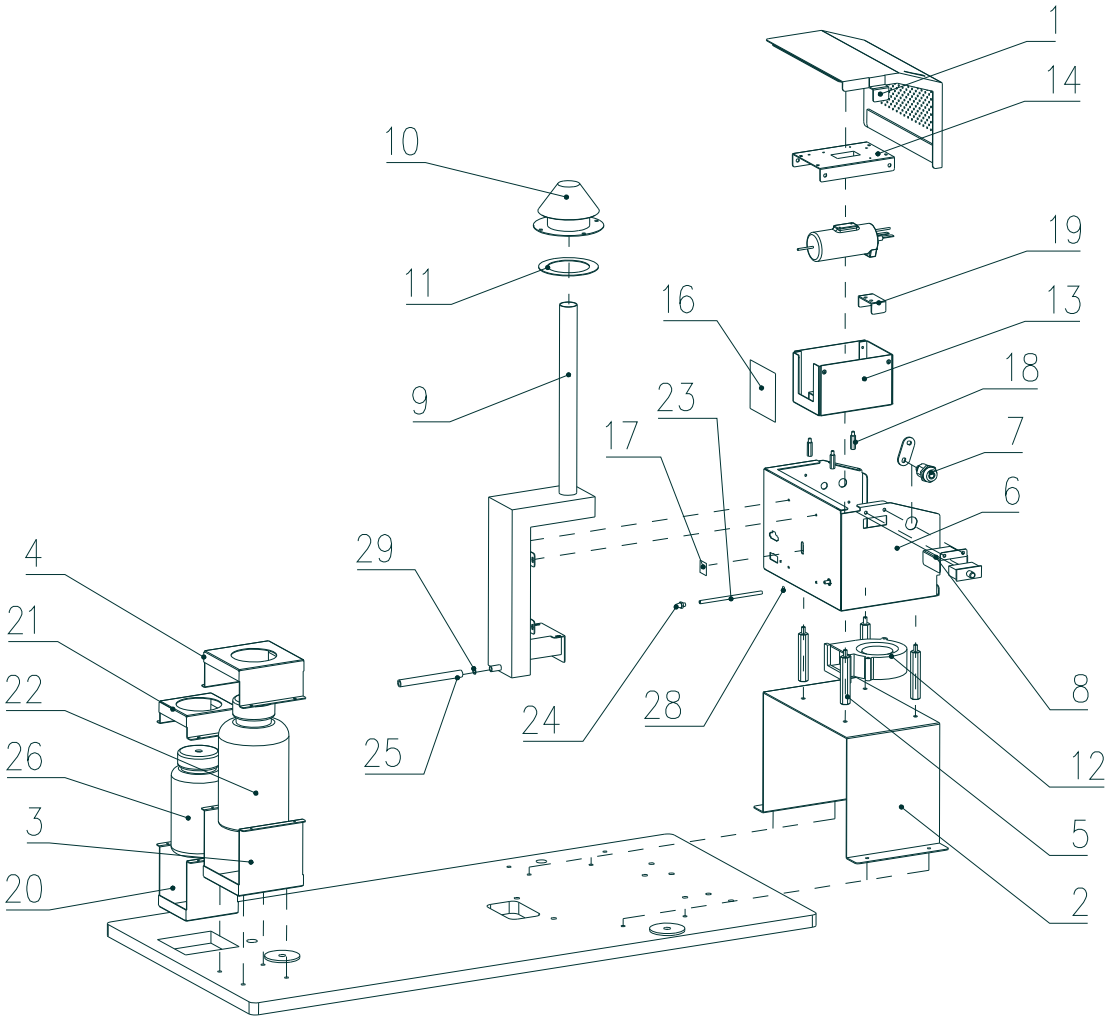

No.	Part No.	Code No.	Name	SPEC.	Qyt
1	M117-167-000	MNXHC-05-07	Smoke spray cover	δ1.2	1
2	M117-172-000	MNXHC-05-05	Mounted base	δ1.5	1
3	M117-174-000	MNXHC-05-04	Bottle base	δ1.2/ black	1
4	M117-173-000	MNXHC-05-03	Bottle cover	δ1.2/ black	1
5	M117-171-000	MNXHC-05-11	Hexagon stud	M5×70+10	4
6	M117-165-000	MNXHC-05-06	Smoke box	δ1	1
7	M117-402-000	25300000004	C582 lock	C582	1
8	M117-465-000	MNXHC-05-16	Shield		1
9	M117-164-000	MNXHC-05-09	Smoke hose	δ1	1
10	M117-162-000	MNXHC-05-10	Smoke head	δ1.2/ green	1
11	M117-163-000	MNXHC-05-13	Smoke head cushion	δ1	1
12	M117-170-000	MNXHC-05-08	Sealant pad	δ5	1
13	M117-168-000	MNXHC-05-01	Heat cover	δ1.2	1
14	M117-166-000	MNXHC-05-02	Heat shield	δ1.2	1
15	M117-459-000	40814010001	Asbestos		0.2
16	M117-210-000	MNXHC-05-19	Front board	δ1.2	1
17	M117-470-000	MNXHC-05-17	Sealing silica gel	δ3	1
18	M117-169-000	MNXHC-05-12	Hexagon stud	M4×20+6	3
19	M117-211-000	MNXHC-05-20	Pad	δ1.5	1
20	M117-463-000	MNXHC-05-14	small bottle bracket	δ1.2/ black	1
21	M117-466-000	MNXHC-05-15	Small bottle cover	δ1.2/ black	1
22	M117-442-000	25101200201	Bottle	180×10	1
23	M117-439-000	25106030005	Silicone tube	Inner dia2.0mm	0.9
24	M117-437-000	20810810003	Filter head	φ4	1
25	M117-438-000	25106030006	Silicone tube	Inner dia 6MM	0.8
26	M117-467-000	25101200203	Small bottle	Φ78×150 500mlA-1	1
27	M117-458-000	41100000088	Smoke liquid	TUV250×180× 150MM	1
28	M117-212-000	25900022004	Hose clamp	Dia 5mm	1
29	M117-213-000	25103000042	Hose clamp	Φ10～Φ16	1

7.6 Electrical Part

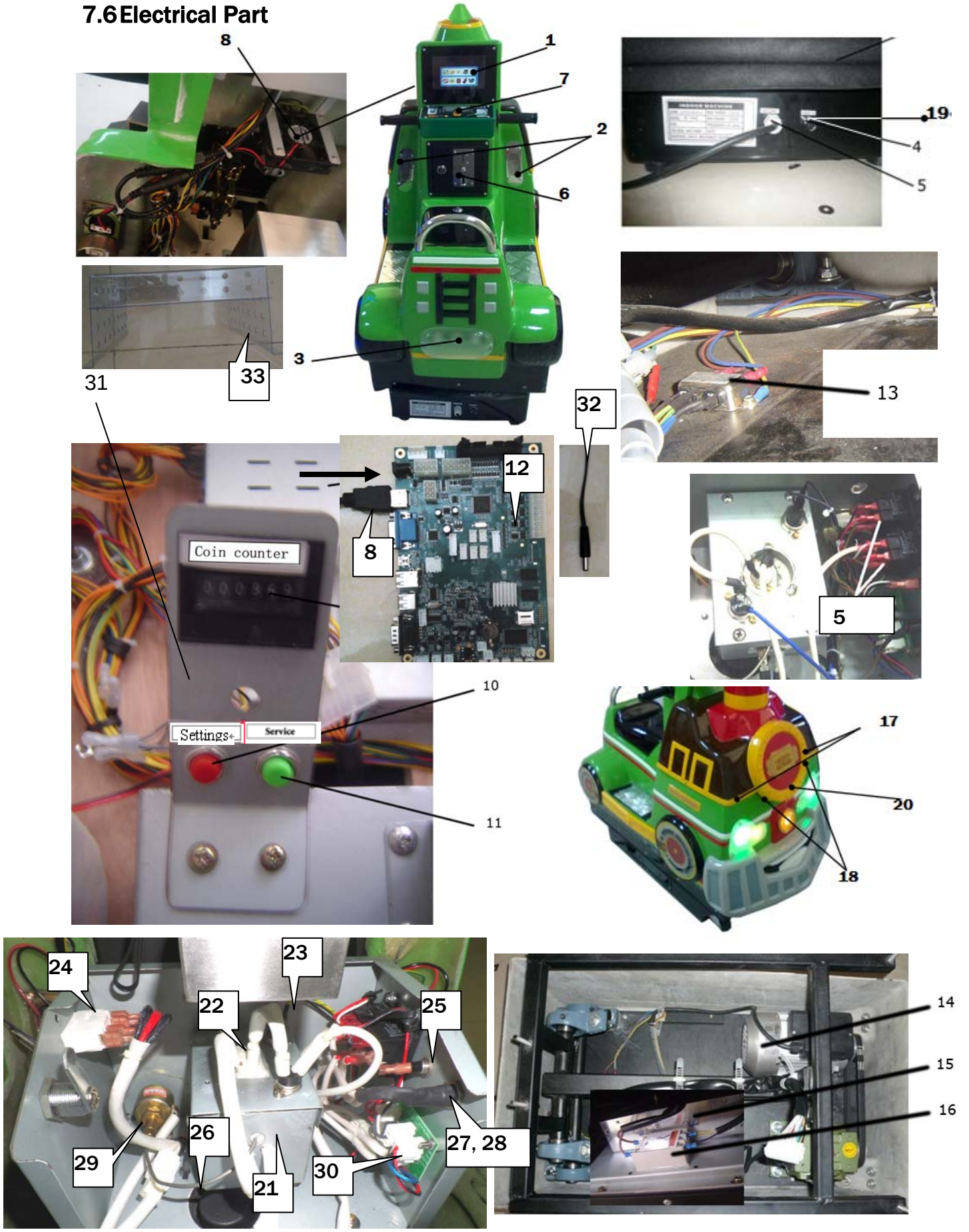

No.	Part No.	Code No	Name	SPEC.	Qyt
1	M117-415-000	21201007001	LCD display	VM-070PC 7"	1
2	M117-416-000	22801000015	Speaker	YDT512-8SF 8Ω8W	2
3	M117-417-000	22003000069	Yellow light	E10 12V YELLOW LED	3
4	M117-418-000	21902000008	Fuse bracket	H3-22	1
5	M117-462-000	22140012007	Relay	12V-T9AP5D52-12	2
6	M117-420-000	22301000029	coin mech	HS-07CS	1
7	M117-421-000	22401040003	Button	Yellow Φ24 2428	1
8	M117-478-000	2.33.07.040001	Video cable	VGA-HDMI 1.2M	1
9	M117-423-000	23000000005	Coin counter	C-012 DC12V	1
10	M117-424-000	22402010001	Settings button	DS-316 (red)	1
11	M117-425-000	22402030001	Service button	DS-316 (green)	1
12	M117-476-000	2.11.07.210020	Android board	MB-A31S	1
13	M117-427-000	23200000002	Filter	YK03T1 125V/250V 3A	1
14	M117-428-000	23405010007	Motor		1
15	M117-429-000	21602000094	Power supply	MW-S-150-12	1
16	M117-430-000	22140000004	Solid-state relay	SSR-40DA	1
17	M117-431-000	22003000052	Green headlight	DC12V E12-G-LED-2-15 green	2
18	M117-417-000	22003000069	Yellow light	E10 12V YELLOW LED	2
19	M117-401-000	21901000014	Fuse	Φ6×30mm T10A 250VAC	1
20	M117-433-000	22003070001	85 circular lamp	Φ94X56mm yellow	1
21	M117-439-000	20810810001A	Heat core	110V 400W	1
22	M117-440-000	22606020001	Thermostat 80	KSD301 250V 10A	2
23	M117-441-000	22606020002	Thermostat 170	KSD302 250V 10A	1
24	M117-459-000	22601010004	Door SW	CHERRY 0E79-30A0	1
25	M117-460-000	22402010002	Red button	PB:11C02R (red)	1
26	M117-461-000	23401000015	blower	9733H12R	1
27	M117-463-000	21901000001	Fuse	Φ5×20mm T6A 250VAC	1
28	M117-468-000	21902000006	Fuse socket	R3-11 110V/250V/10A	1
29	M117-471-000	20810810002A	Bump	60HZ 30DSB-ZJF	1
30	M117-474-000	21712000001	Converted board	TICK-CH.PCB	1
31	M117-120-000	20251104047	Meter plate	Metal	1
32	M117-477-000	2.33.01.018022	DC power cord	22AWG,12V 5.5	1
33	M117-479-000	202.5.11.04.068	Main board cover	PVC	1

7.6 Decals

Part 1

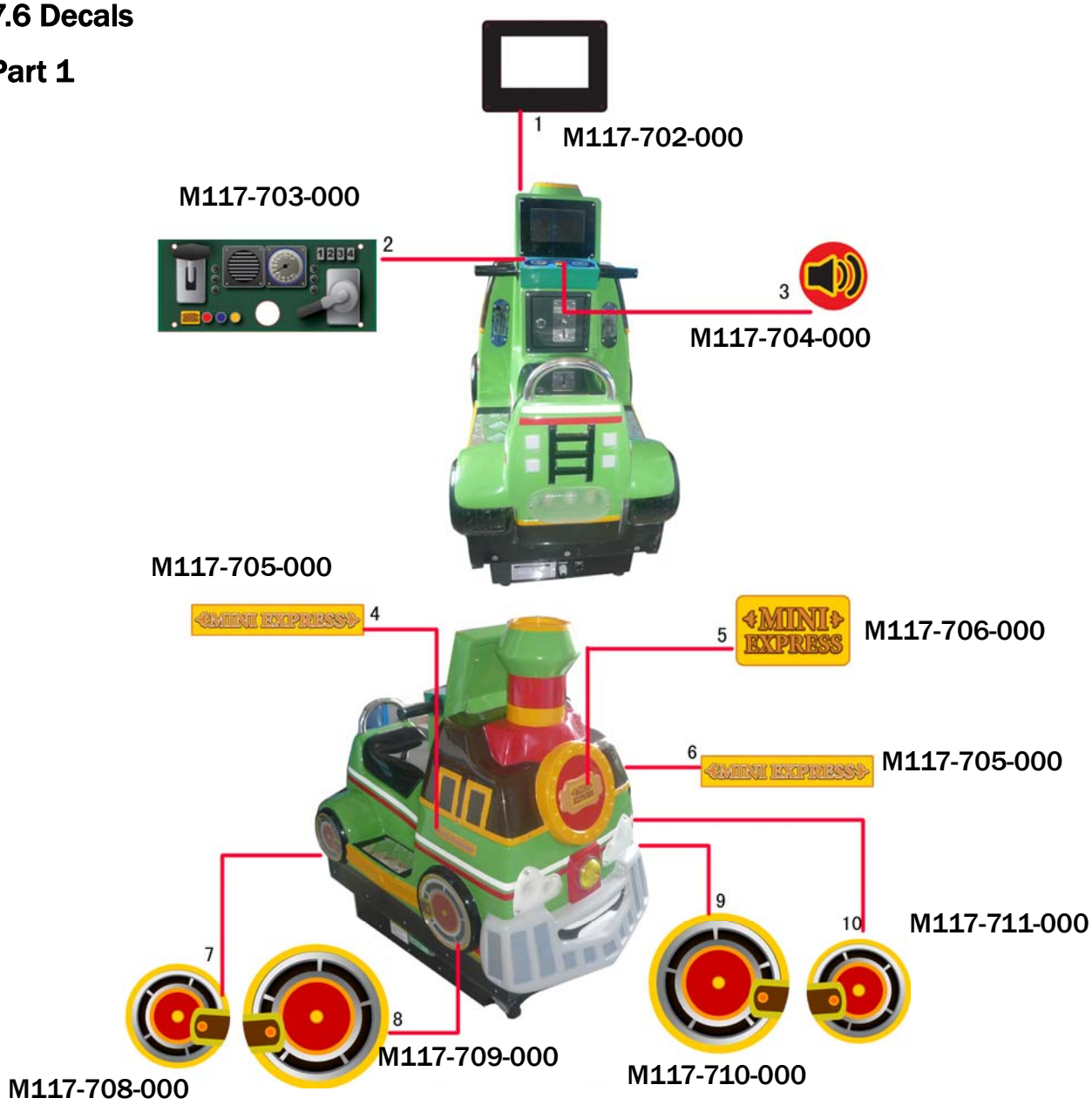

No.	Part No.	Code No	Name	SPEC.	QTY.
1	M117-702-000	20550801002	LCD frame decal	240X185	1
2	M117-703-000	20551104002	Control panel decal	225×99	1
3	M117-704-000	20551104003	Button decal	21×21	1
4	M117-705-000	20551104004	Both sides decal	148×28	1
5	M117-706-000	20551104001	Front logo decal	94×58	1
6	M117-705-000	20551104004	Both sides decal	148×28	1
7	M117-708-000	20551104007	Left decal(small wheel)	170×170	1
8	M117-709-000	20551104005	Left decal(big wheel)	223×242	1
9	M117-710-000	20551104006	Right decal(big wheel)	223×242	1
10	M117-711-000	20551104008	Right decal(small wheel)	170×170	1

Part 2

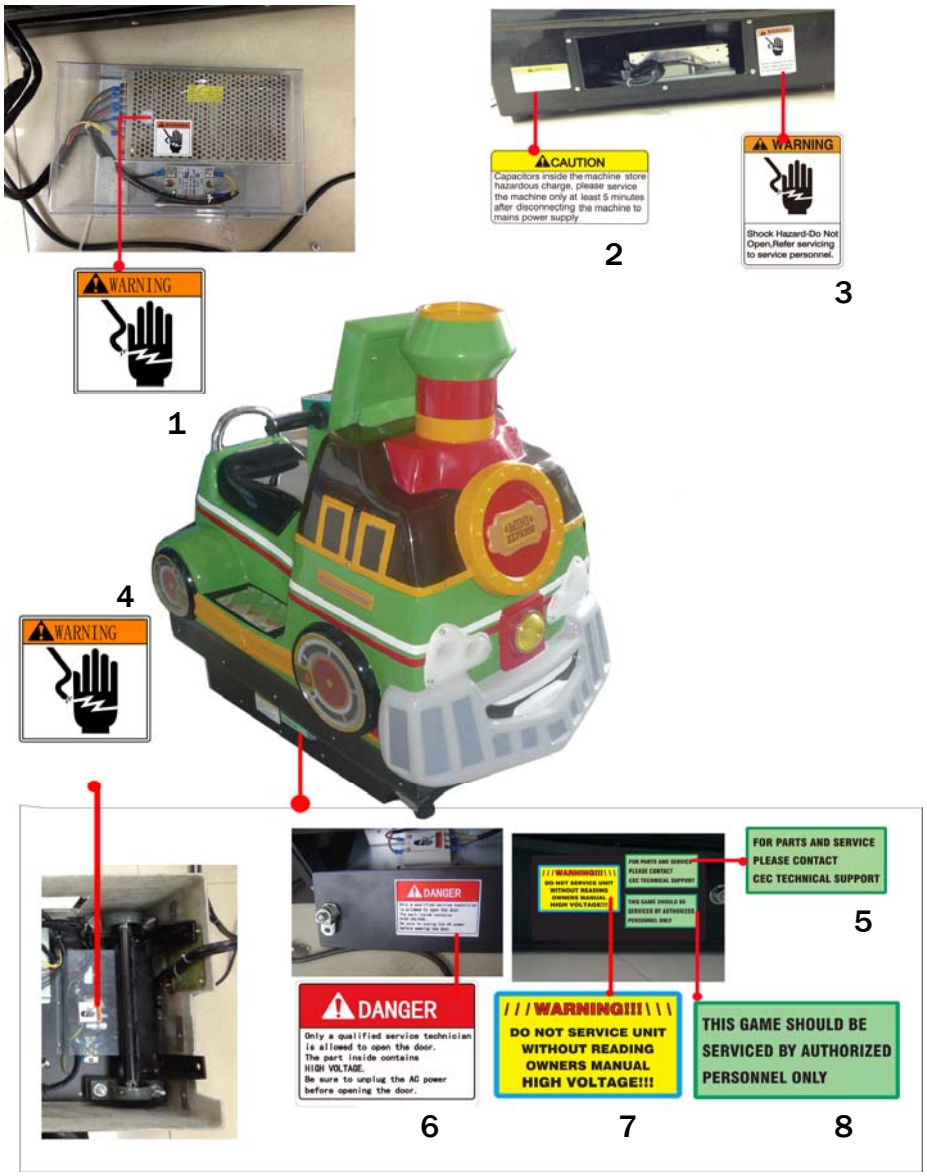

No.	Part No.	Code No.	Name	SPEC.	Qyt.
1	M117-718-000	TY-HM-36	High Voltage warning decal(small)	41×42	2
2	M117-723-000	TY-HM-86	Capacity discharge label	100X50	1
3	M117-724-000	TY-HM-85	Warning label - L	62X88	1
4	M117-718-000	TY-HM-36	High Voltage warning decal(small)	41×42	2
5	M117-725-000	TY-HM-43	Service label 2	100×50	1
6	M117-720-000	TY-HM-58	Danger label	95×70	1
7	M117-721-000	MNXHC-HM-09	Warning label	100×60	1
8	M117-722-000	TY-HM-42	Service label1	100×50	1

Part 3

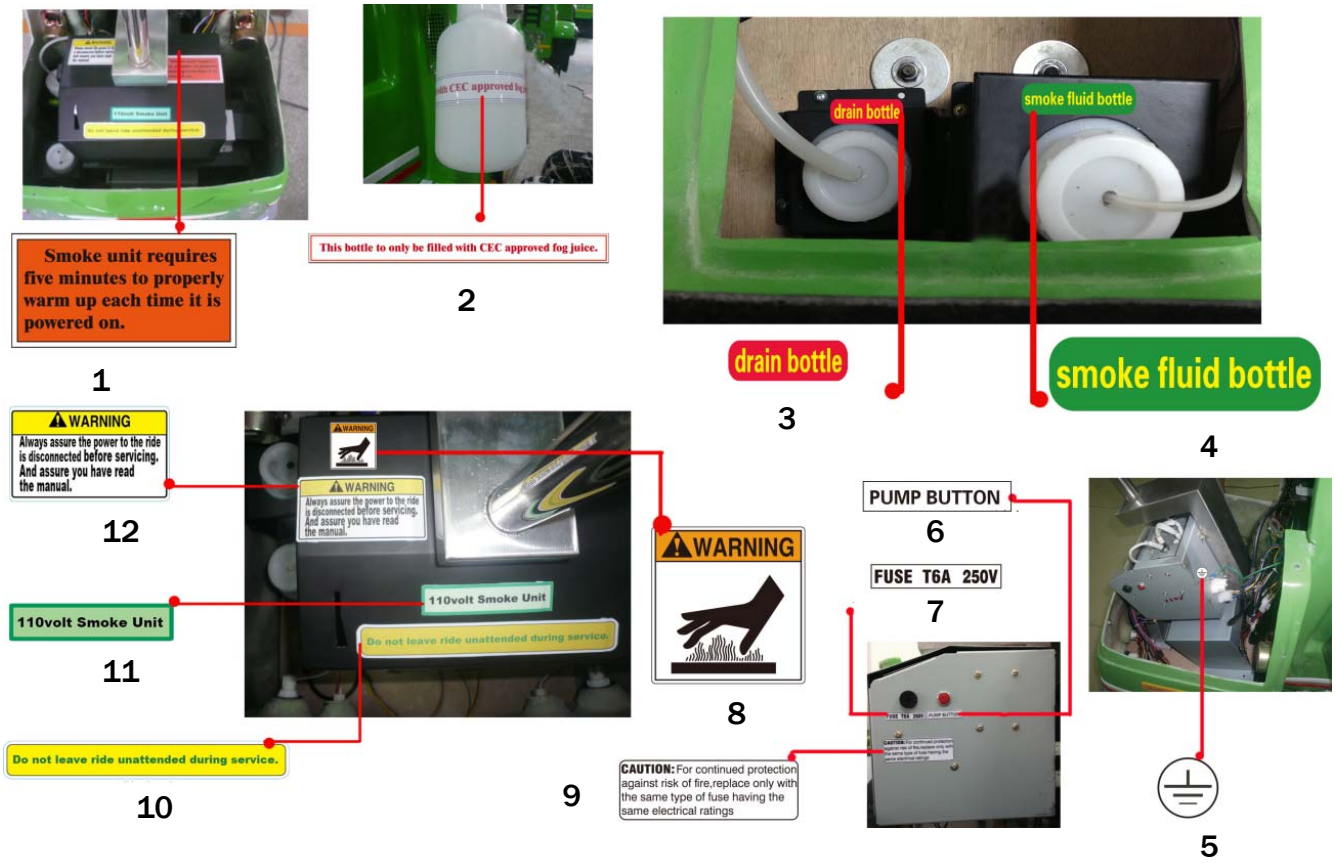

No.	Part No.	Code No.	Name	SPEC.	Qyt.
1	M117-741-000	MNXHC-HM-22	Warning decal 4	77×39	1
2	M117-742-000	MNXHC-HM-23	Warning decal 5	280×27	1
3	M117-737-000	MNXHC-HM-20	Drain bottle decal	25×10	1
4	M117-736-000	MNXHC-HM-19	Smoke fluid bottle decal	55×15	1
5	M117-726-000	TY-HM-91	GND label	12X12	1
6	M117-464-000	MNXHC-HM-15	Pump button label	22×6	1
7	M117-727-000	TY-HM-75	Fuse label	33X6	1
8	M117-740-000	TY-HM-38	Warning label - S	41×42	1
9	M117-728-000	TY-HM-87	Fuse warning label	60X20	1
10	M117-734-000	MNXHC-HM-17	Warning decal 2	83×19	1
11	M117-735-000	MNXHC-HM-18	Warning decal 3	166×23	1
12	M117-733-000	MNXHC-HM-16	Warning decal 1	80×48	1

Part 4

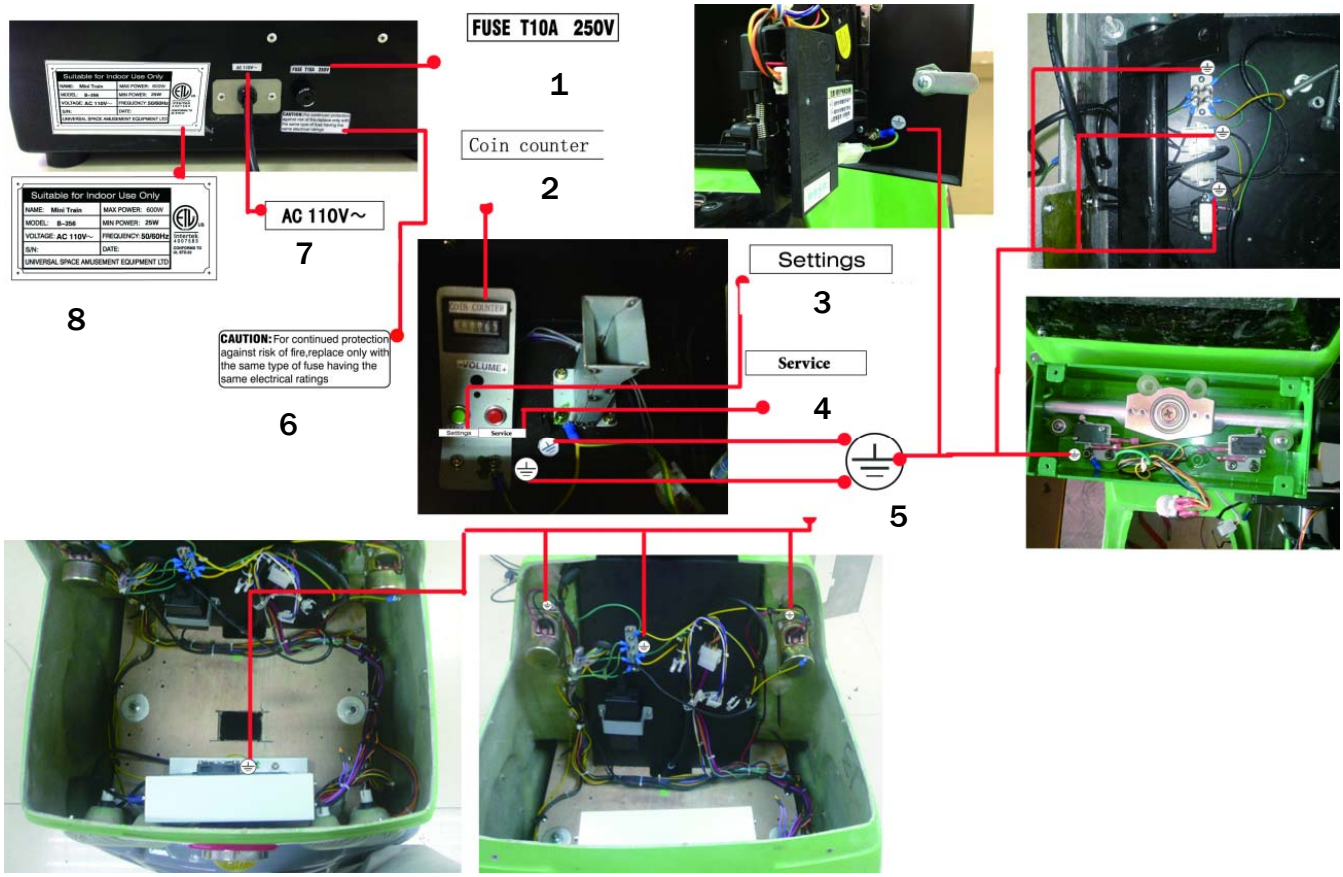

No.	Part No.	Code No.	Name	SPEC.	Qyt.
1	M117-729-000	TY-HM-77	Fuse label	33X6	1
2	M117-715-000	TY-HM-01	Coin counter label	30×6	1
3	M117-730-000	TY-HM-92	Settings label	30X6	1
4	M117-731-000	TY-HM-09	Service label	30×6	1
5	M117-726-000	TY-HM-91	New GND label	12X12	11
6	M117-728-000	TY-HM-87	Fuse warning label	60X20	1
7	M117-738-000	TY-HM-71	New voltage 110V	25X6	1
8	M117-739-000	MNXHC-HM-24	ETL nameplate	135×68	1
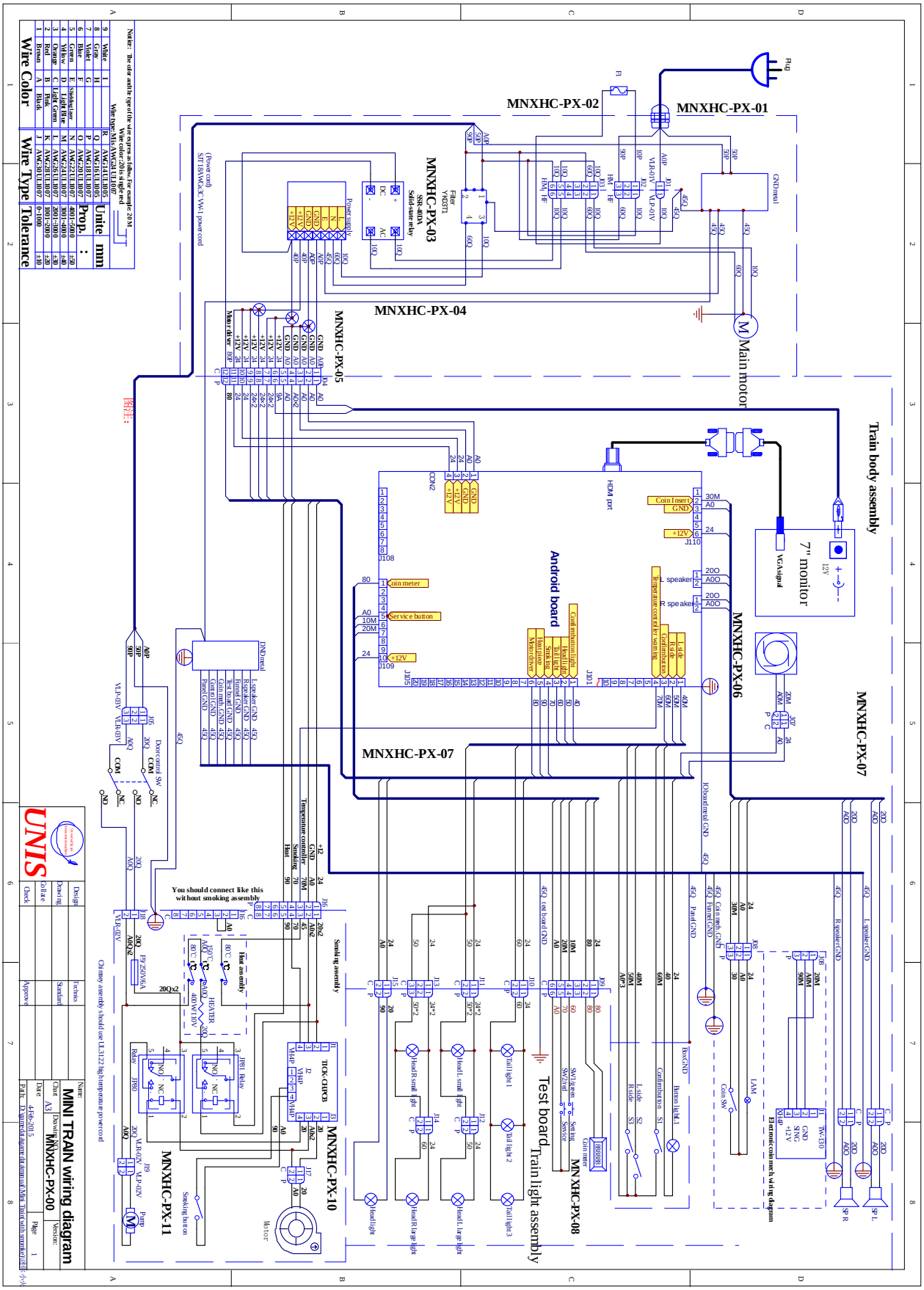
Wiring Diagram